GROVE	WASSERHEIZUNG THERMO PRO 90 WATER HEATING THERMO PRO 90	BILDTAFEL PICTORIAL DISPLAY			GMK3060
		12.16	4169515-ETL A	1/1	

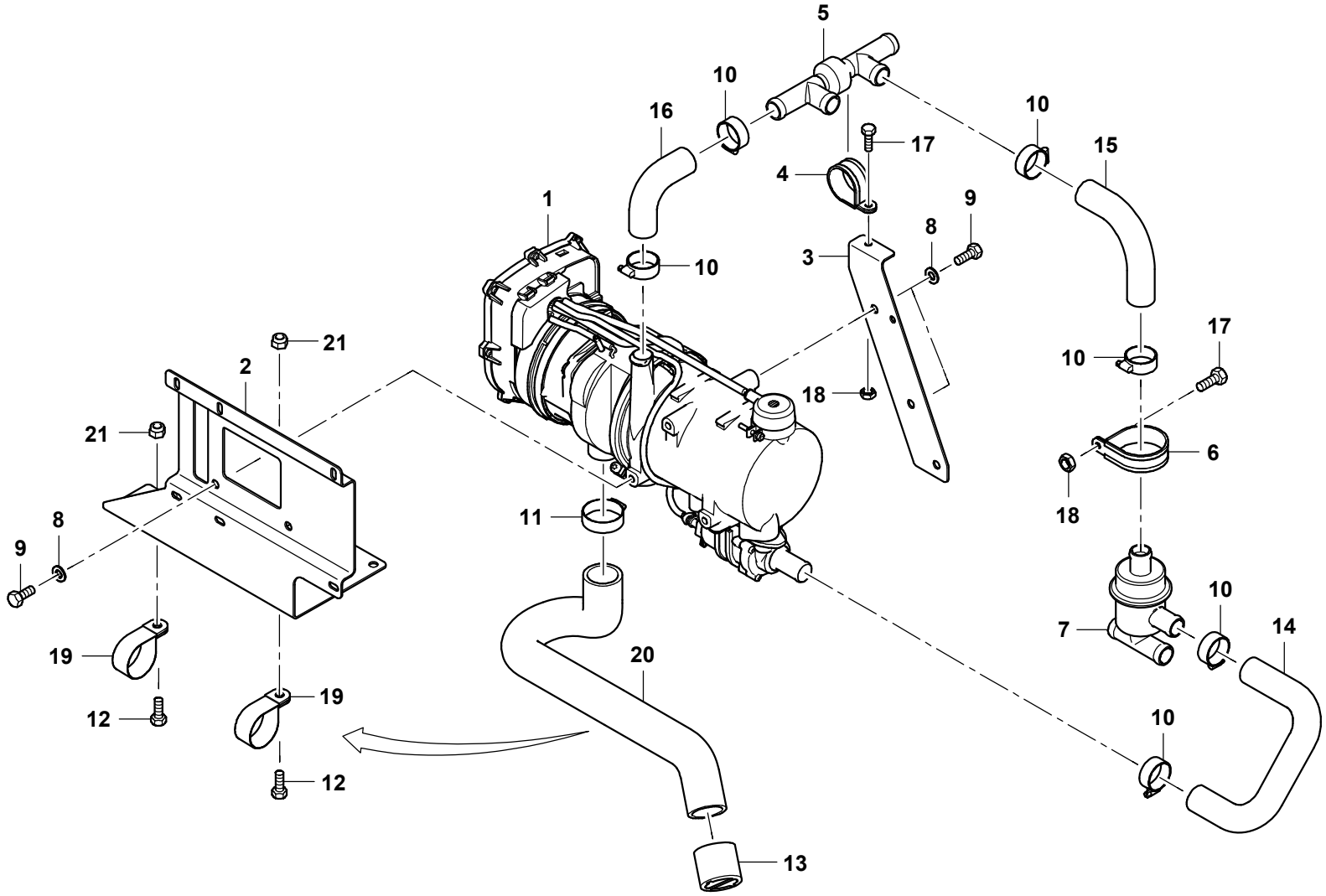

4169515-A-BL01-1216-0000